© COPYRIGHT OF THIS DRAWING IS RESERVED BY DBFL CONSULTING ENGINEERS. NO PART SHALL BE REPRODUCED OR TRANSMITTED WITHOUT THEIR WRITTEN PERMISSION.

NO CHANGES OF WHATSOEVER NATURE ARE TO BE MADE TO ANY DETAILS SET OUT OR CONTAINED IN ANY DBFL SPECIFICATIONS OR DRAWINGS
UNLESS THE EXPRESS CONSENT HAS BEEN OBTAINED IN ADVANCE, IN WRITING, FROM DBFL.

ON ORIGINAL

0 5 10 15 20 25 30 40 50mm

NOTES:

SOURCE = GREATER DUBLIN REGIONAL CODE OF PRACTICE V6.0

1. 225mm THK CL. 20N/20mm CONCRETE FOUNDATIONS WITH 1 NO. LAYER OF A393 REINFORCING MESH.
2. PRE-FORMED HALF CIRCLE CHANNEL PIPES. THE PIPELINE MAY, WHERE PRACTICABLE, BE LAID THROUGH THE MANHOLE AND THE CROWN CUT OUT TO HALF DIAMETER, PROVIDED FLEXIBLE JOINTS ARE SITUATED ON EACH SIDE NO FURTHER THAN 600mm FROM THE INNER FACE OF THE MANHOLE WALL.
3. MANHOLE CONSTRUCTION:
   - FOR SURFACE WATER MANHOLES HIGH-DENSITY BLOCKS TO CLS10 OF I.S.20 PART 1 : 1987 OR CL.30N/20mm INSITU CONCRETE.
   - BLOCKWORK SHALL BE BEDDED AND JOINTED USING MORTAR TO I.S.406. BEDS AND VERTICAL JOINTS SHALL BE COMPLETELY FILLED WITH MORTAR AS THE BLOCK ARE LAID.
   - JOINTS SHALL BE FLUSH POINTED AS THE WORK PROCEEDS.
   - ALL FOUL MANHOLES MUST BE FACED IN SOLID ENGINEERING BRICK (MIN. CLASS A OR B), OR INSITU CONCRETE FOR 1 METRE ABOVE BENCHING LEVEL.
   - BRICK TO BE BONDED TO BLOCKWORK USING ENGLISH GARDEN WALL BOND.
   - WHERE BRICK IS BONDED TO BLOCKWORK, INTERNAL MANHOLE DIMENSIONS SHOWN ARE MEASURED FROM THE INSIDE FACE OF BRICKWORK.
   - WHERE MANHOLES ARE CONSTRUCTED OF IN-SITU CONCRETE A MINIMUM OF 1 No. LAYER OF A393 REINFORCING MESH TO BE PROVIDED IN WALLS AND SLABS U.N.O.
4. RELIEVING ARCH FORMED BY 215x103x65 SOLID ENGINEERING BRICK CLASS A OR B AS PER DRAWING. RELIEVING ARCHES USED IN BRICK OR BLOCK WORK MANHOLES TO EXTEND OVER FULL THICKNESS OF WALL. A DOUBLE ARCH IS TO BE FORMED FOR PIPE DIAMETERS GREATER THAN 600mm.
5. BENCHING AND PIPE CHANNEL PIPE SURROUND – CL.20/20 CONCRETE.
6. BENCHING FINISHED IN 2:1 SAND–CEMENT MORTAR WITH A SMOOTH TROWEL FINISH, AT 1 IN 30 SLOPE TOWARDS CHANNEL.
7. STANDARD RUNGS AT 300 CRS VERTICALLY AND GALVANIZED TO LATEST VERSION OF BS 729 OR EQUIVALENT. NOTE: STEP IRONS ARE NOT ACCEPTABLE.
8. 600mm SQUARE OPE IN ROOF SLAB.
9. PRECAST R.C. ROOF SLAB SHALL BE 200mm THICK IN CLASS 30N/20mm, WITH 40mm COVER TO STEEL.
   ROOF SLAB – 35N/20mm INSITU CONCRETE, CEMENT CONTENT 300kg/m^3, WATER/CEMENT RATIO 0.6. PROVIDE 2 LAYERS OF REINFORCING MESH REF. A393 @ 6.16kg/m WITH MIN. 50mm COVER.
10. 1 TO 2 COURSES OF SOLID ENGINEERING BRICKS CLB TO I.S.91:1983 SET IN 1:3 (CEMENT AND MORTAR).
11. CAVANAGH BROSNA LOCKED OR SIMILAR APPROVED CLASS D400 OR E600 CIRCULAR MANHOLE COVER AND FRAME TO IS/EN 124. 150mm DEEP FRAME FOR ROADS AND 100mm DEEP FOR FOOTPATHS AND GREEN AREAS. NON-ROCK DESIGN, 2 CLOSED KEYWAYS IN EACH COVER, MANUFACTURED FROM SPHEROIDAL GRAPHITE CAST IRON (DUCTILE CAST IRON), 600 x 600 (600 DIA.) CLEAR OPENING, COVER AND FRAME COATED IN BITUMEN OR OTHER APPROVED MATERIAL, COVER TO HAVE A MINIMUM MASS OF 140kg/m2, FRAME BEARING AREA SHALL BE 80,000mm2 MIN., FRAMES SHALL BE DESIGNED TO PREVENT COVERS FALLING INTO MANHOLE. FRAMES SHALL BE BEDDED ON APPROVED MORTAR TO MANUFACTURERS INSTRUCTIONS.
12. SHORT LENGTH PIPE AND PIPE JOINT EXTERNAL TO MANHOLE SHALL NOT EXCEED 600mm FROM THE INNER FACE OF MANHOLE WALL.
13. TOE HOLES OF 230mm MINIMUM DEPTH AND GALVANIZED STEEL SAFETY RAILINGS TO BE PROVIDED IN BENCHING OF SEWERS GREATER THAN 525mm DIA. AND DEPTH TO INVERT >3m FOR ACCESS TO INVERT.
14. A SAFETY CHAIN IS TO BE PROVIDED ON PIPES THAT EXCEED 450mm IN DIAMETER. MILD STEEL SAFETY CHAIN SHALL BE 10mm NOMINAL SIZE GRADE M(4) NON-CALIBRATED CHAIN, TYPE 1, COMPLYING WITH B.S.4942 PART 2 OR EQUIVALENT.
15. WHEN DEPTH OF MANHOLES TO INVERT IS GREATER THAN 3m LADDERS SHALL BE USED INSTEAD OF RUNGS TO B.S.4211 OR EQUIVALENT EXCEPT THAT STRINGERS SHOULD BE NOT LESS THAN 65mm x 12mm IN SECTION AND RUNGS 25mm IN DIAMETER. FIXED LADDERS SHOULD MEET THE DIMENSIONAL REQUIREMENTS OF B.S.4211 OR EQUIVALENT.
16. LADDER STRINGERS SHOULD BE ADEQUATELY SUPPORTED FROM THE MANHOLE WALL AT INTERVALS OF NOT MORE THAN 2.0m. STRINGERS SHOULD BE BOLTED TO CLEATS TO FACILITATE RENEWAL.
17. ALL LADDERS, RUNGS, HANDRAILS, SAFETY CHAINS ETC. SHALL BE HOT DIP GALVANIZED TO B.S.729 OR EQUIVALENT.
18. PIPE SHOULD BE CUT FLUSH WITH THE INSIDE SURFACE OF THE MANHOLE WALL SO THAT THE CHANNEL EXTENDS THE FULL LENGTH OF THE MANHOLE.
19. POSITION OF 910 SQUARE OPE IN INTERMEDIATE ROOF SLAB.
   - ALL MANHOLES SHALL BE WATERTIGHT TO THE SATISFACTION OF THE ENGINEER.
   - FORMWORK TO REINFORCED CONCRETE AND MASS CONCRETE SHALL COMPLY WITH CLASS 2, SECTION 6.2.7, B.S.8110: PART 1: 1997.
   - FINISH TO THE TOP OF THE SLABS SHALL COMPLY WITH TYPE A, SECTION 6.2.7, B.S.8110: PART 1: 1997.
   - PLAN DIMENSIONS OF MANHOLES ARE BASED ON BLOCK WORK HAVING A CO-ORDINATING SIZE OF 450 X 225 X 100.
   - MANHOLES ARE DESIGNED TO B.S.8005 AND WALL THICKNESS TO I.S.325 BLOCK WORK DESIGN CODE TAKING GRANULAR FILL PRESSURE AND H.B. SURCHARGE.
   - REINFORCEMENT TO SLABS TO ENGINEERS DETAILS.
20. FOR MANHOLES >3m DEPTH TO INVERT USE 30N/20mm INSITU CONCRETE. PROVIDE 2 LAYERS OF REINFORCING MESH REF. A393 @ 6.16kg/m WITH MIN. 50mm COVER. ADDITIONAL REINFORCEMENT TO BE SUPPLIED OVER PIPE CROWN.
21. MANHOLE OPENINGS TO BE SITUATED FURTHEST FROM THE NEAREST CARRIAGEWAY. MANHOLE STEPS / ACCESS TO BE POSITIONED TO ALLOW VIEWING OF INCOMING TRAFFIC.
22. PROVIDE 2 NO. 300mm LONG T10 DOWELS @ 200mm c/c FROM FOUNDATIONS TO WALLS.
23. PROVIDE REINFORCEMENT AT WALL INTERSECTIONS TO DETAIL SHOWN.
24. WHERE IN-SITU ROOF SLAB IS PROVIDED USE REINFORCEMENT TO WALLS TO DETAIL SHOWN.

GENERAL NOTES:

i) ALL BRICK TO BE SOLID ENGINEERING BRICK CLASS A OR B.
ii) DISTANCE FROM THE TOP RUNG OF THE LADDER TO GROUND LEVEL MUST BE MAXIMUM OF 500mm.

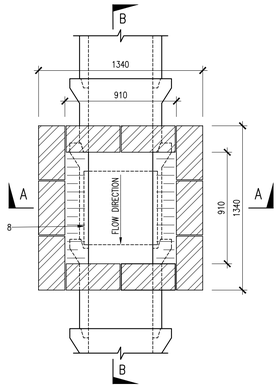

PLAN BELOW ROOF SLAB

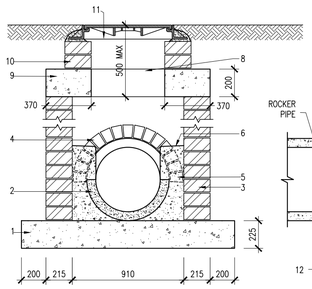

SECTION A–A

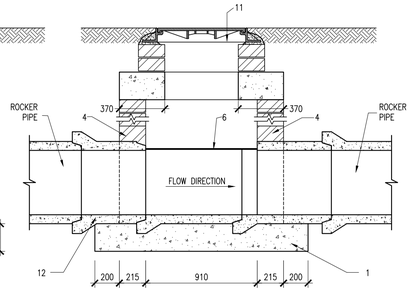

SECTION B–B

– TYPE A MANHOLE –

MANHOLE DETAILS FOR PIPE DIA's 150, 225, 300, 375 & 450mm.
DEPTH TO INVERT LESS THAN 1.0m.

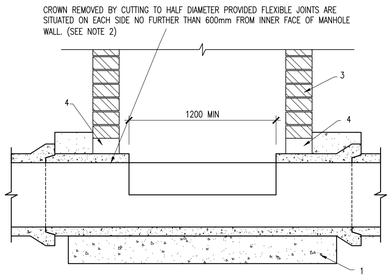

ALTERNATIVE METHOD OF FORMING CHANNEL THROUGH MANHOLE

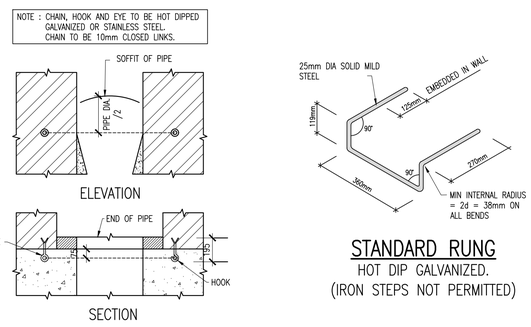

SAFETY CHAIN, HOOK AND EYE PLAN

STANDARD RUNG

HOT DIP GALVANIZED.
(IRON STEPS NOT PERMITTED)

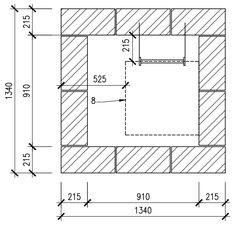

SECTION C–C

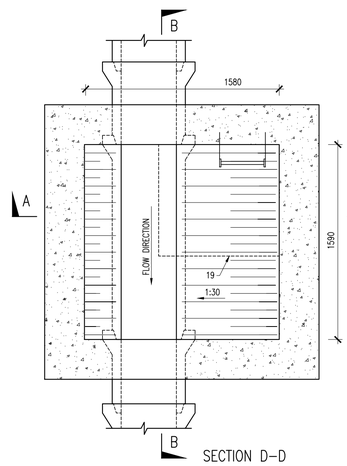

SECTION D–D

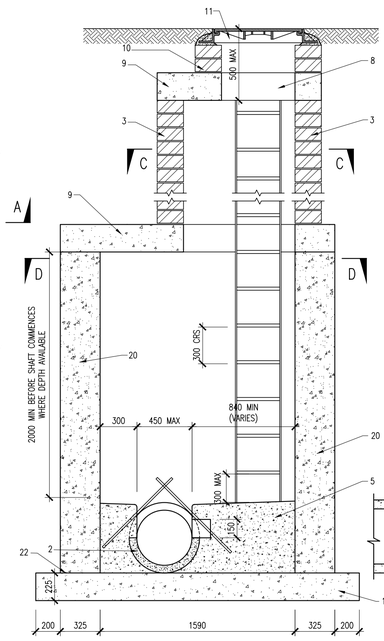

SECTION A–A

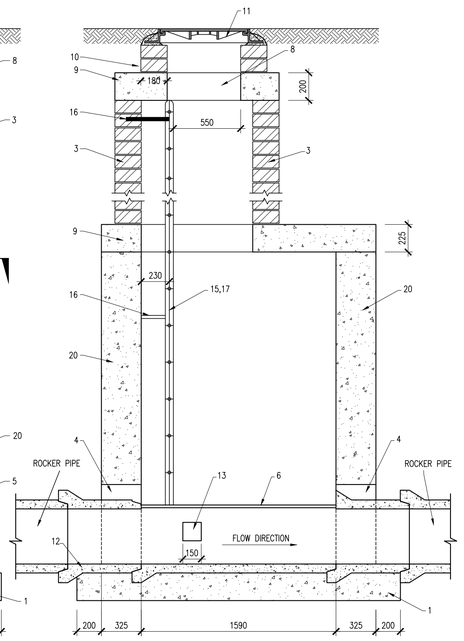

SECTION B–B

– TYPE C MANHOLE –

MANHOLE DETAILS FOR PIPE DIA's 225, 300, 375 & 450mm.
DEPTH TO INVERT 3.0m TO 6.0m.

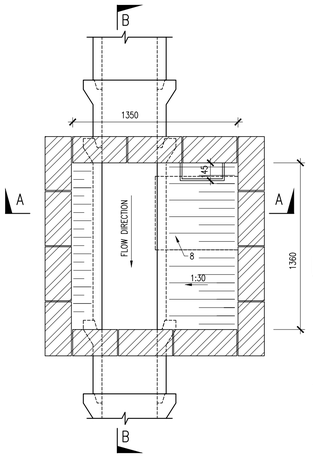

PLAN BELOW ROOF SLAB

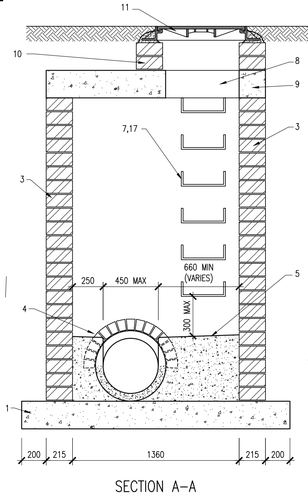

SECTION A–A

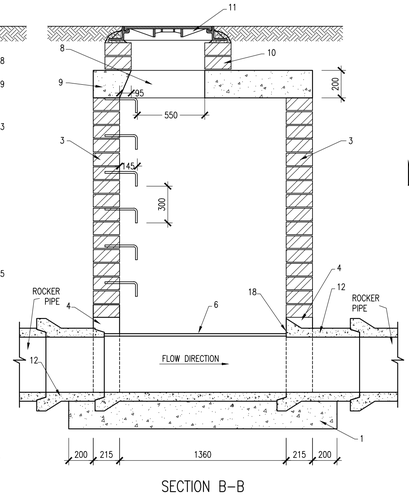

SECTION B–B

– TYPE B MANHOLE –

MANHOLE DETAILS FOR PIPE DIA's 225, 300, 375 & 450mm.
DEPTH TO INVERT GREATER THAN 1.0m & LESS THAN 3.0m.

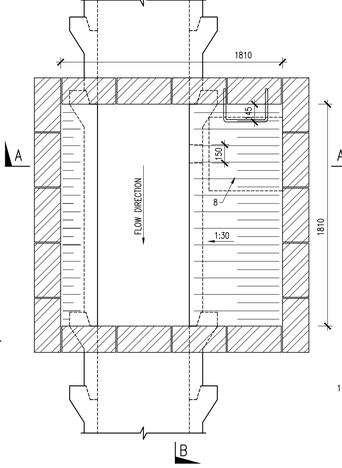

PLAN BELOW ROOF SLAB

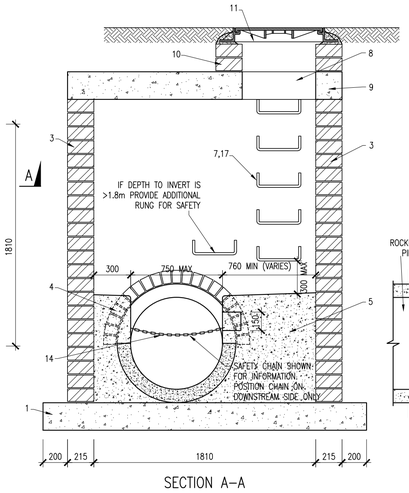

SECTION A–A

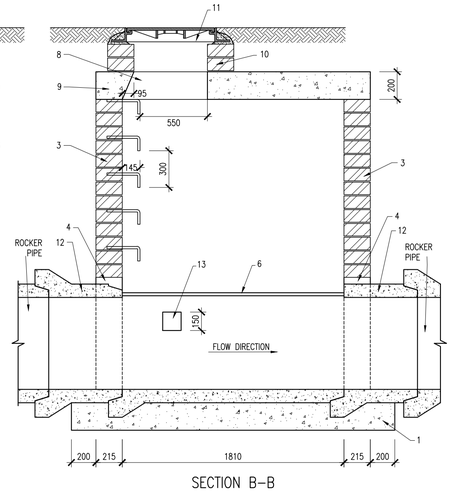

SECTION B–B

– TYPE D MANHOLE –

MANHOLE DETAILS FOR PIPE DIA's 525, 600, 675 & 750mm.
DEPTH TO INVERT 1.0m TO 3.0m.

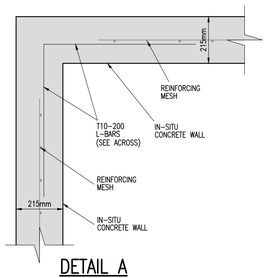

DETAIL A

(PLAN OF 215mm TO 215mm WIDE WALLS)
N.T.S.

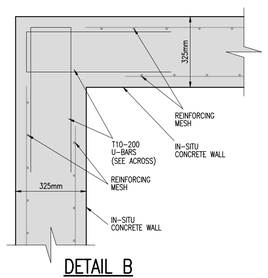

DETAIL B

(PLAN OF 325mm TO 325mm WIDE WALLS)
N.T.S.

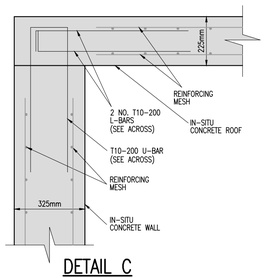

DETAIL C

(SECTION THRU 325mm WIDE WALL TO 225mm WIDE ROOF SLAB)
N.T.S.

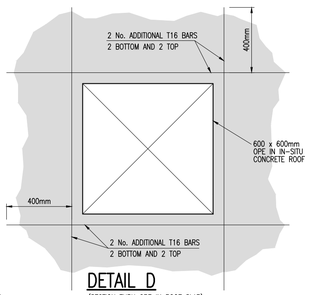

DETAIL D

(SECTION THRU OPE IN ROOF SLAB)
N.T.S.

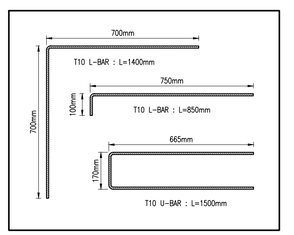

REINFORCEMENT DETAILS

NOTE :
ALL MANHOLE COVERS, DUCT COVERS, VALVE COVERS, etc. IN VERGES / SLOPES TO HAVE 225 WIDE x 150 DEEP CONCRETE SURROUND.

rev	date	description	by	chkd.
P02	15/06/21	ISSUED FOR PLANNING	DCH	LMCL
P01	28/08/20	ISSUED FOR PRE-PLANNING	DCH	LMCL

client approval
- A - Approved
- B - Approved with comments
- C - Do not use

suitability: S2 - INFORMATION
issue purpose: PLANNING

DBFL Consulting Engineers
Civil, Structural & Transportation Engineering
www.dbfl.ie

DUBLIN OFFICE: Ormond House, Upper Ormond Quay, Dublin 7, D07 W704
PHONE +353 1 400 4000

CORK OFFICE: 14 Scurr Mall, Cork, T12 CT91
PHONE +353 21 2024538

WATERFORD OFFICE: Suite 8b The Atrium, Maritana Gate, Canada Street, Waterford, X91 W028
PHONE +353 51 309 500

project ref.
MIXED USE DEVELOPMENT-CHADWICKS. SWORDS ROAD, SANTRY.

drawing title
SURFACE WATER DETAILS SHEET 1 OF 6

client
DWYER NOLAN DEVELOPMENTS

designed by	author	scale	sheet size
LMCL	DCH	AS SHOWN	A1

drawing no.: 200060-DBFL-SW-ST-DR-C-5011
revision: P02